Thermo-chiller Air-cooled 460 V Type

HRS200 Series

Standard Type

(UL Standards)

RoHS

How to Order

HRS 200 – A □ – 46 – □ S □

Cooling capacity

200	20 kW

Cooling method

A	Air-cooled refrigeration

Pipe thread type

Nil	Rc
F	G (With Rc-G conversion fitting)
N	NPT (With Rc-NPT conversion fitting)

Power supply

46	3-phase 380 to 415 VAC (50/60 Hz) 3-phase 460 to 480 VAC (60 Hz)

Option 1

Nil	None
A	With caster adjuster-foot
K*1	With fluid fill port

*1 This is a manual fluid fill port that is different from the automatic fluid fill port. Fluid can be supplied manually into the tank without removing the side panel. (Fluid can be supplied manually for models without option K if the side panel is removed.)

Option 2

Nil	None
W	SI unit only

Specifications

Model				HRS200-A□-46-□S
Cooling method				Air-cooled refrigeration
Refrigerant				R410A (HFC)
Refrigerant charge			kg	1.65
Control method				PID control
Ambient temperature/Altitude*1, 7, 9			°C	Temperature: –5 to 45, Altitude: less than 3000 m
Circulating fluid system	Circulating fluid*1, 2			Tap water, 15% Ethylene glycol aqueous solution, Deionized water
	Set temperature range*1		°C	5 to 35
	Cooling capacity*3, 7 (50/60 Hz)		kW	17.5/20.5
	Heating capacity*4 (50/60 Hz)		kW	3.3/5.3
	Temperature stability*5		°C	±1
	Pump capacity (50/60 Hz)	Rated flow (Outlet)	L/min	45 (0.31/0.45 MPa)
		Maximum flow rate	L/min	110/130
		Maximum pump head	m	36/50
	Minimum operating flow rate*6		L/min	25
	Tank capacity		L	25
	Circulating fluid outlet, circulating fluid return port			Rc1 (Symbol F: G1, Symbol N: NPT1)
	Tank drain port			Rc3/4 (Symbol F: G3/4, Symbol N: NPT3/4)
	Automatic fluid fill system (Standard)	Supply side pressure range	MPa	0.2 to 0.5
		Supply side fluid temperature	°C	5 to 35
		Automatic fluid fill port		Rc1/2 (Symbol F: G1/2, Symbol N: NPT1/2)
		Overflow port		Rc1 (Symbol F: G1, Symbol N: NPT1)
	Fluid contact material		Metal	Stainless steel, Copper (Heat exchanger brazing), Brass, Bronze
			Resin	PTFE, PU, FKM, EPDM, PVC, NBR, POM, PE, NR
Electrical system	Power supply			3-phase 380 to 415 VAC (50/60 Hz) Allowable voltage range ±10% (No continuous voltage fluctuation) 3-phase 460 to 480 VAC (60 Hz) Allowable voltage range ±4%, –10% (Max. voltage less than 500 V and no continuous voltage fluctuation)
	Applicable earth leakage breaker (Standard)	Rated current	A	30
		Sensitivity of leak current	mA	30
	Rated operating current*5 (50/60 Hz)		A	13.4/14.2
	Rated power consumption*5 (50/60 Hz)		kW(kVA)	6.8/9.1 (9.4/11.4)
Noise level (Front 1 m/Height 1 m)*5			dB(A)	75
Waterproof specification				IPX4
Accessories				Alarm code list sticker 1 pc. (English), Operation Manual (for installation/operation) 1 pc. (English), Y-strainer (40 meshes) 25A, Barrel nipple 25A, Anchor bolt fixing brackets 2 pcs. (including 6 M8 bolts)*8
Weight (dry state)			kg	214

*1 When the ambient temperature or circulating fluid temperature is 10°C or below, refer to "Operation at low ambient temperature or low circulating fluid temperature" (page 188).
*2 Use fluid in condition below as the circulating fluid.
Tap water: Standard of The Japan Refrigeration And Air Conditioning Industry Association (JRA GL-02-1994)
15% ethylene glycol aqueous solution: Diluted with clean water, without any additives such as antiseptics.
Deionized water: Electric conductivity 1 μS/cm or higher (Electric resistivity 1 MΩ·cm or lower)
*3 ① Ambient temperature: 32°C, ② Circulating fluid: Tap water, ③ Circulating fluid temperature: 20°C, ④ Circulating fluid flow rate: Rated flow, ⑤ Power supply: 460 VAC
*4 ① Ambient temperature: 32°C, ② Circulating fluid: Tap water, ③ Circulating fluid flow rate: Rated flow, ④ Power supply: 460 VAC
*5 ① Ambient temperature: 32°C, ② Circulating fluid: Tap water, ③ Circulating fluid temperature: 20°C, ④ Load: Same as the cooling capacity, ⑤ Circulating fluid flow rate: Rated flow, ⑥ Power supply: 460 VAC, ⑦ Piping length: Shortest
*6 Fluid flow rate to maintain the cooling capacity. If the actual flow rate is lower than this, install a bypass piping.
*7 If the product is used at an altitude of 1000 m or higher, refer to "Operating Environment/Storage Environment" (page 187) Item 13 "For altitudes of 1000 m or higher."
*8 The anchor bolt fixing brackets (including 6 M8 bolts) are used for fixing to wooden skids when packaging the thermo-chiller. No anchor bolt is included.
*9 For the product operation in the UL compliant conditions, refer to "Operating Environment/Storage Environment" (page 187).

Cooling Capacity

HRS200-A□-46-□S□

[50 Hz]

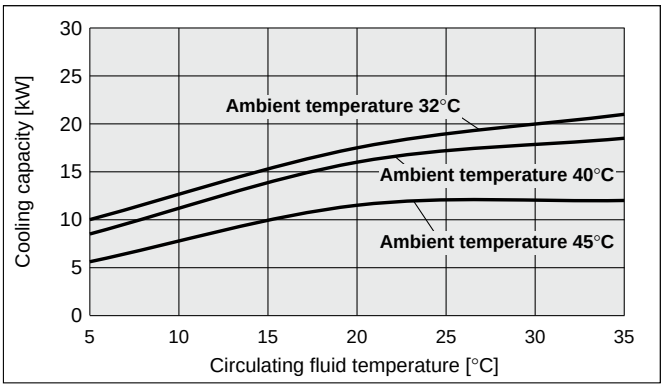

[60 Hz]

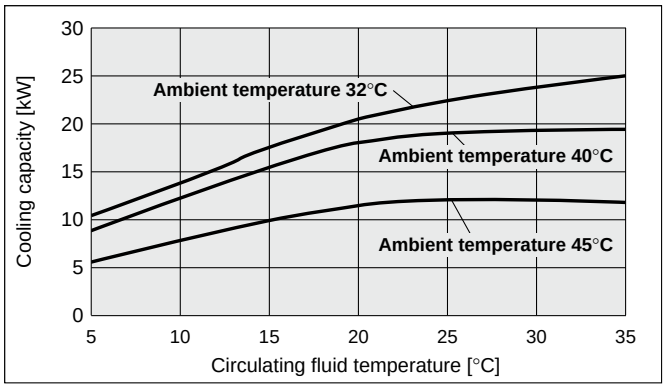

Pump Capacity

HRS200-A□-46-□S□

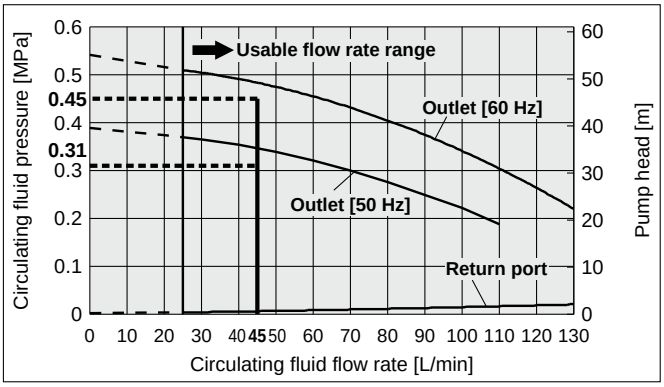

Dimensions

HRS200-A-46-S

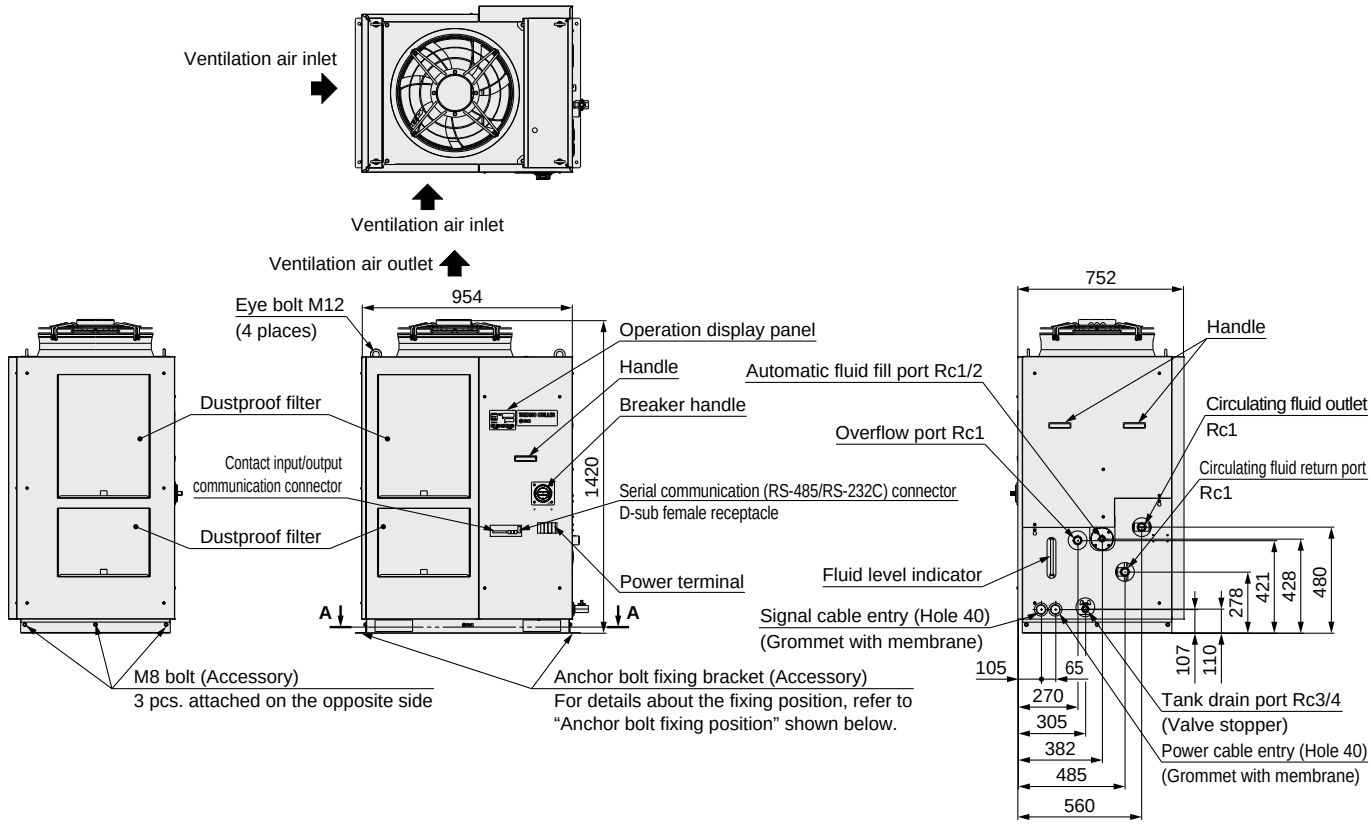

Anchor bolt fixing position

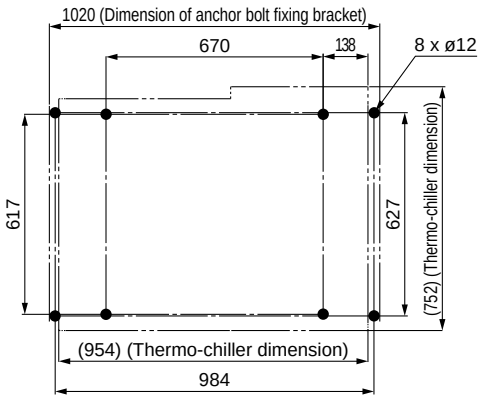

View A-A

Accessory: Y-strainer mounting view

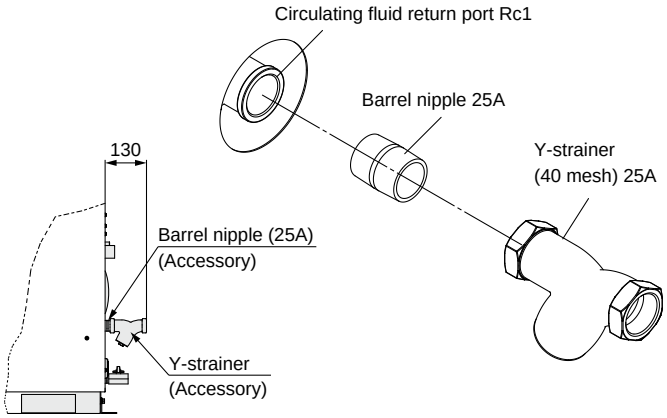

Recommended External Piping Flow

External piping circuit is recommended as shown below.

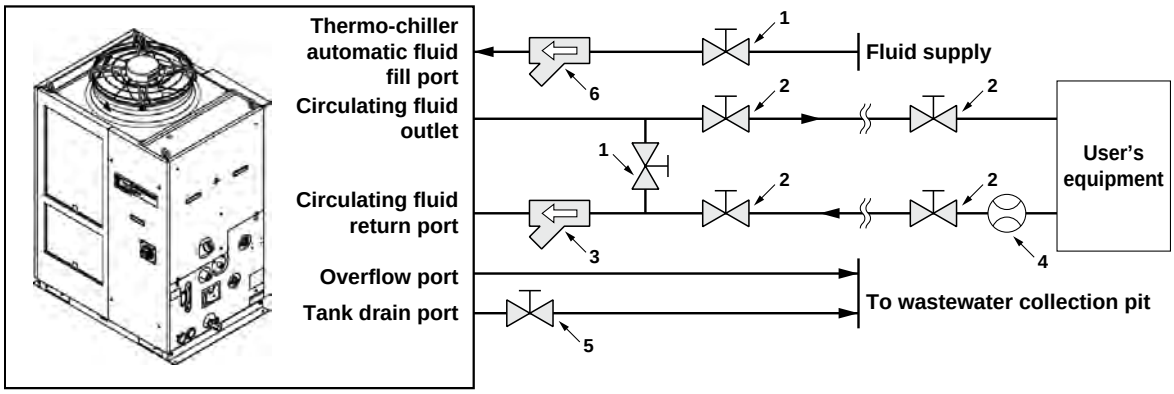

∗ Ensure that the overflow port is connected to the wastewater collection pit in order to avoid damage to the tank of the thermo-chiller.

No.	Description	Size	Recommended part no.	Note
1	Valve	Rc1/2	—	—
2	Valve	Rc1	—	—
3	Y-strainer	Rc1 #40	Accessory	Install either the strainer or filter. If foreign matter with a size of 20 μm or more are likely to enter, install the particle filter. For the recommended filter, refer to the optional accessory HRS-PF005 (page 182).
	Filter	Rc1 20 μm	HRS-PF005∗1	
4	Flow meter	—	—	Prepare a flow meter with an appropriate flow range.
5	Valve (Part of thermo-chiller)	Rc3/4	—	—
6	Y-strainer	Rc1/2 #40	—	Install either the strainer or filter. If foreign matter with a size of 20 μm or more are likely to enter, select and prepare a particle filter.
	Filter	Rc1/2 20 μm	—	

∗1 The filter shown above cannot be directly connected to the thermo-chiller. Install it in the user's piping system.

Cable Specifications

Power supply and signal cable should be prepared by user.

Power Cable Specifications

Rated value for thermo-chiller			Power cable examples	
Power supply	Applicable breaker rated current	Terminal block thread size	Cable size	Crimped terminal on the thermo-chiller side
3-phase 380 to 415 VAC (50 Hz) 3-phase 460 to 480 VAC (60 Hz)	30 A	M5	4 cores x 5.5 mm² (4 cores x AWG10) (Including grounding cable)	R5.5-5

∗ An example of the cable specifications is when two kinds of vinyl insulated wires with a continuous allowable operating temperature of 70°C at 600 V, are used at an ambient temperature of 30°C. Select the proper size of cable according to an actual condition.

Signal Cable Specifications

Terminal specifications		Cable specifications
Terminal block screw diameter	Recommended crimped terminal	0.75 mm² (AWG18) Shielded cable
M3	Y-shape crimped terminal 1.25Y-3	

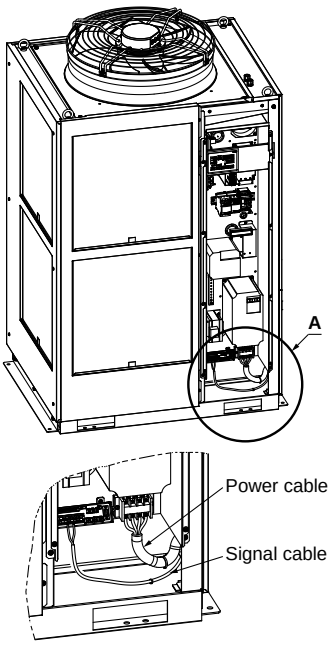

Partially enlarged view A

Operation Display Panel

The basic operation of this unit is controlled through the operation display panel on the front of the product.

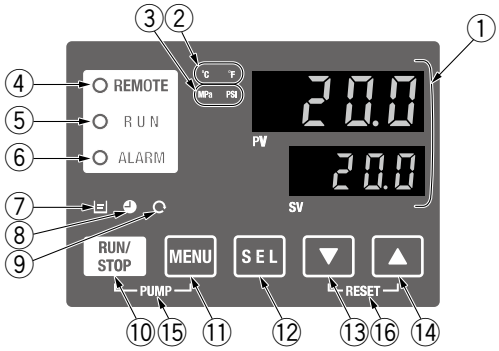

No.	Description	Function	
①	**Digital display (7-segment, 4 digits)**	PV	Displays the circulating fluid current discharge temperature and pressure and alarm codes and other menu items (codes).
		SV	Displays the circulating fluid discharge temperature and the set values of other menus.
②	**[°C] [°F] lamp**	Equipped with a unit conversion function. Displays the unit of displayed temperature (default setting: °C).	
③	**[MPa] [PSI] lamp**	Equipped with a unit conversion function. Displays the unit of displayed pressure (default setting: MPa).	
④	**[REMOTE] lamp**	Enables remote operation (start and stop) by communication. Lights up during remote operation.	
⑤	**[RUN] lamp**	Lights up when the product is started, and goes off when it is stopped. Flashes during stand-by for stop or anti-freezing function, or independent operation of the pump.	
⑥	**[ALARM] lamp**	Flashes with buzzer when alarm occurs.	
⑦	**[ ] lamp**	Lights up when the surface of the fluid level indicator falls below the L level.	
⑧	**[ ] lamp**	Equipped with a timer for start and stop. Lights up when this function is operated.	
⑨	**[ ] lamp**	Equipped with a power failure auto-restart function, which restarts the product automatically after stopped due to a power failure. Lights up when this function is operated.	
⑩	**[RUN/STOP] key**	Makes the product start or stop.	
⑪	**[MENU] key**	Shifts the main menu (display screen of circulating fluid discharge temperature and pressure) and other menus (for monitoring and entry of set values).	
⑫	**[SEL] key**	Changes the item in menu and enters the set value.	
⑬	**[▼] key**	Decreases the set value.	
⑭	**[▲] key**	Increases the set value.	
⑮	**[PUMP] key**	Press the [MENU] and [RUN/STOP] keys simultaneously. The pump starts running independently to make the product ready for start-up (release the air).	
⑯	**[RESET] key**	Press the [▼] and [▲] keys simultaneously. The alarm buzzer is stopped and the [ALARM] lamp is reset.	

List of Function

No.	Function	Outline
1	**Main display**	Displays the current and set temperature of the circulating fluid, discharge pressure of the circulating fluid. Changes the circulating fluid set temperature.
2	**Alarm display menu**	Indicates alarm number when an alarm occurs.
3	**Inspection monitor menu**	Product temperature, pressure and accumulated operating time can be checked as daily inspection. Use these for daily inspection.
4	**Key-lock**	Keys can be locked so that set values cannot be changed by operator error.
5	**Timer for operation start/stop**	Timer is used to set the operation start/stop.
6	**Signal for the completion of preparation**	A signal is output when the circulating fluid temperature reaches the set temperature, when using contact input/output and serial communication.
7	**Offset function**	Use this function when there is a temperature offset between the discharge temperature of the thermo-chiller and user's equipment.
8	**Reset after power failure**	Start operation automatically after the power supply is turned on.
9	**Key click sound setting**	Operation panel key sound can be set on/off.
10	**Changing temp. unit**	Temperature unit can be changed. Centigrade (°C) ⇔ Fahrenheit (°F)
11	**Changing pressure unit**	Pressure unit can be changed. MPa ⇔ PSI
12	**Data reset**	Functions can be reset to the default settings (settings when shipped from the factory).
13	**Accumulation time reset**	Reset function when the pump, the fan or the compressor is replaced. Reset the accumulated time here.
14	**Anti-freezing function**	Circulating fluid is protected from freezing during winter or at night. Set beforehand if there is a risk of freezing.
15	**Warming-up function**	When circulating fluid temperature rising time at starting needs shortening during winter or at night, set beforehand.
16	**Anti-snow coverage function**	If there will be a possibility of the snow coverage due to the change of the installation environment (season, weather), set beforehand.
17	**Alarm buzzer sound setting**	Alarm sound can be set to on/off.
18	**Alarm customizing**	Operation during alarm condition and threshold values can be changed depending on the alarm type.
19	**Communication**	This function is used for contact input/output or serial communication.

Alarm

This unit has 39 types of alarms as standard, and displays each of them by its alarm code on the PV screen with the [ALARM] lamp ([LOW LEVEL] lamp) lit up on the operation display panel. The alarm can be read out through communication.

Code	Alarm message
AL01	Low level in tank
AL02	High circulating fluid discharge temp.
AL03	Circulating fluid discharge temp. rise
AL04	Circulating fluid discharge temp. drop
AL05	High circulating fluid return temp.
AL08	Circulating fluid discharge pressure rise
AL09	Circulating fluid discharge pressure drop
AL10	High compressor intake temp.
AL11	Low compressor intake temp.
AL12	Low super heat temp.
AL13	High compressor discharge pressure
AL15	Refrigeration circuit pressure (high pressure side) drop
AL16	Refrigeration circuit pressure (low pressure side) rise

Code	Alarm message
AL17	Refrigeration circuit pressure (low pressure side) drop
AL18	Compressor running failure
AL19	Communication error
AL20	Memory error
AL21	DC line fuse cut
AL22	Circulating fluid discharge temp. sensor failure
AL23	Circulating fluid return temp. sensor failure
AL24	Compressor intake temp. sensor failure
AL25	Circulating fluid discharge pressure sensor failure
AL26	Compressor discharge pressure sensor failure
AL27	Compressor intake pressure sensor failure
AL28	Pump maintenance
AL29	Fan maintenance

Code	Alarm message
AL30	Compressor maintenance
AL31	Contact input 1 signal detection
AL32	Contact input 2 signal detection
AL37	Compressor discharge temp. sensor failure
AL38	Compressor discharge temp. rise
AL40	Dustproof filter maintenance
AL41	Power stoppage
AL42	Compressor waiting
AL43	Fan failure
AL45	Compressor over current
AL47	Pump over current
AL50	Incorrect phase error
AL51	Phase board over current

For details, refer to the Operation Manual. Please download it via our website, https://www.smcworld.com

Communication Functions

Contact Input/Output

Item		Specifications
Connector type		M3 terminal block
Input signal	**Insulation method**	Photocoupler
	Rated input voltage	24 VDC
	Operating voltage range	21.6 to 26.4 VDC
	Rated input current	5 mA TYP
	Input impedance	4.7 kΩ
Contact output signal	**Rated load voltage**	48 VAC or less/30 VDC or less
	Maximum load current	500 mA AC/DC (Resistance load)
	Minimum load current	5 VDC 10 mA
Output voltage		24 VDC ±10% 500 mA MAX (No inductive load)
Circuit diagram		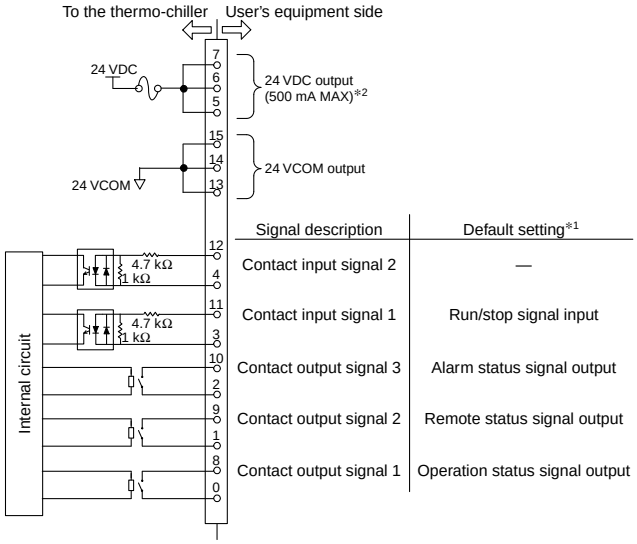

∗1 The pin numbers and output signals can be set by user. For details, refer to the Operation Manual for communication.
∗2 When using with optional accessories, depending on the accessory, the allowable current of 24 VDC devices will be reduced. Refer to the operation manual of the optional accessories for details.

Serial Communication

The serial communication (RS-485/RS-232C) enables the following items to be written and read out.
For details, refer to the Operation Manual for communication.

Writing

Run/Stop
Circulating fluid temperature setting (SV)

Readout

Circulating fluid present temperature
Circulating fluid discharge pressure
Status information
Alarm occurrence information

Item	Specifications	
Connector type	D-sub 9-pin, Female connector (Mounting screw: M2.6 x 0.45)	
Protocol	Modicon Modbus compliant/Simple communication protocol	
Standards	EIA standard RS-485	EIA standard RS-232C
Circuit diagram	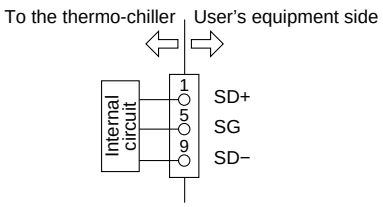	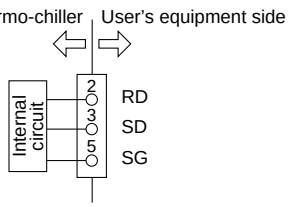

∗ The terminal resistance of RS-485 (120 Ω) can be switched by the operation display panel. For details, refer to the Operation Manual for communication.
Do not connect other than in the way shown above, as it can result in failure.

Please download the Operation Manual via our website, https://www.smcworld.com

HRS200 Series
Options

∗ **Options have to be selected when ordering the thermo-chiller. It is not possible to add them after purchasing the unit.**

A Option symbol

With Caster Adjuster-foot

HRS200−A□−46−AS

With caster adjuster-foot

Unfixed casters and adjuster feet stops are mounted

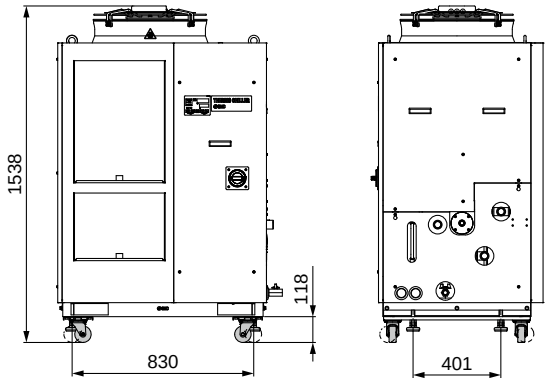

K Option symbol

With Fluid Fill Port

HRS200−A□−46−KS

With fluid fill port

When the automatic fluid fill in port is not used, water can be supplied manually without removing the panel.

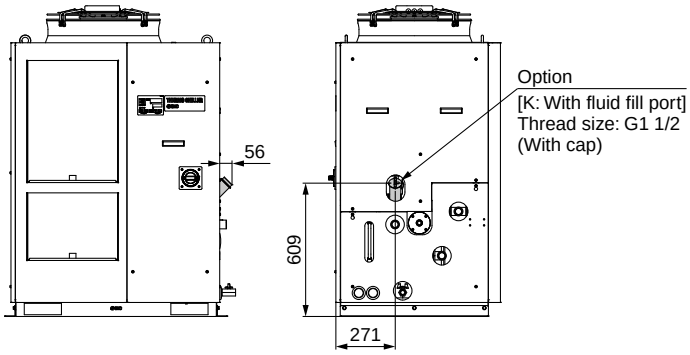

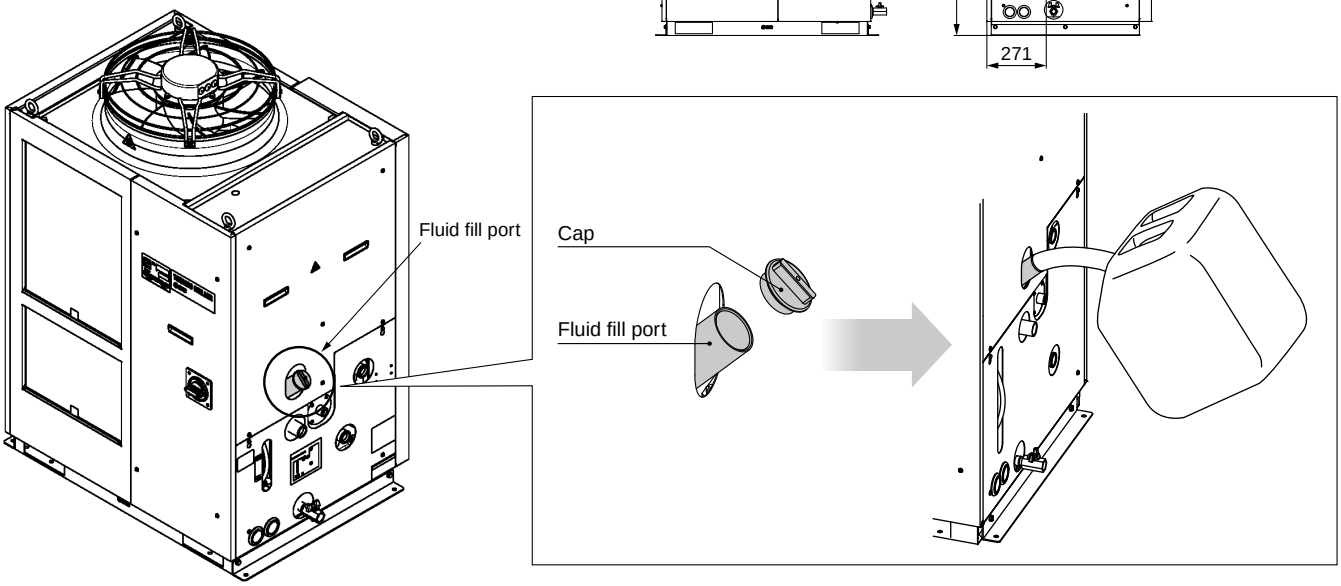

W Option symbol

SI Unit Only

HRS200−A□−46−SW

SI unit only

The circulating fluid temperature and pressure are displayed in SI units [MPa/°C] only.
If this option is not selected, a product with a unit selection function will be provided by default.
∗ No change in external dimensions

Optional Accessories

① Piping Conversion Fitting

This is a fitting to change the port from Rc to G or NPT.
· Circulating fluid outlet, Circulating fluid return port, Overflow port Rc1 → NPT1 or G1
· Drain port Rc3/4 → NPT3/4 or G3/4
· Automatic fluid fill port Rc1/2 → NPT1/2 or G1/2
(It is not necessary to purchase this when pipe thread type F or N is selected in "How to Order" since it is included in the product.)

Part no.	Contents	Applicable model
HRS-EP013	NPT thread conversion fitting set	**HRS200-A-46-□S**
HRS-EP014	G thread conversion fitting set	

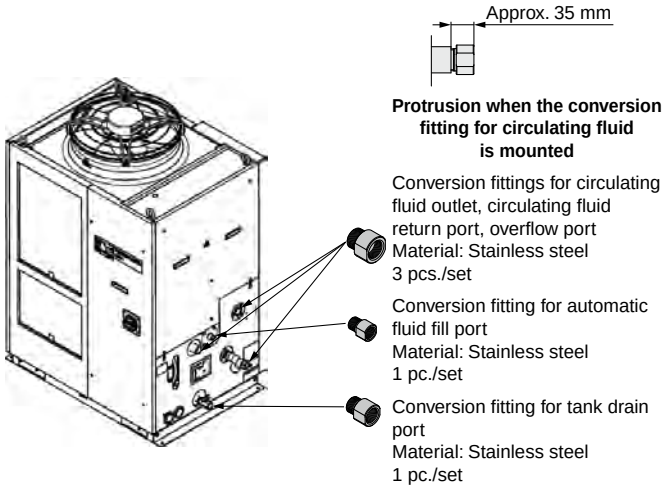

HRS-EP013, HRS-EP014

② Caster Adjuster-foot Kit

This is a set of unfixed casters and adjuster feet stop.
When installed by user, it is necessary to lift the thermo-chiller by a forklift or sling work.
Carefully read the procedure manual included with this kit before performing the installation.

Part no.	Applicable model
HRS-KS002	**HRS200-A□-46-□S**

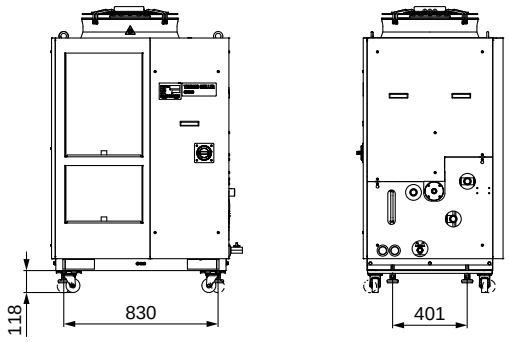

Fig. 1 Mounting view

Parts List

Description
Procedure manual
Caster adjuster-foot bracket (2 pcs.)
Fixing bolt (M8) (8 pcs.)

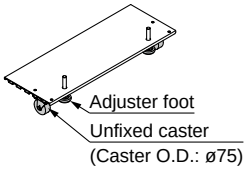

Fig. 2 Caster adjuster-foot bracket (2 pcs.)

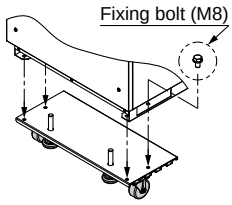

Fig. 3 Fixing bolt (8 pcs.)

③ Electric Conductivity Control Set

The set indicates and controls the electric conductivity of the circulating fluid. Refer to the Operation Manual for details.

Part no.	Applicable model
HRS-DI006	**HRS200-A□-46-□S**

Measurement range of electric conductivity	2.0 to 48.0 μS/cm
Set range of electric conductivity target	5.0 to 45.0 μS/cm
Set range of electric conductivity hysteresis	2.0 to 10.0 μS/cm
Operating temperature range (Circulating fluid temperature)	5 to 60°C
Power consumption	400 mA or less
Installation environment	Indoor

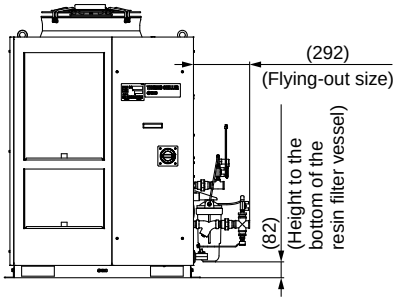

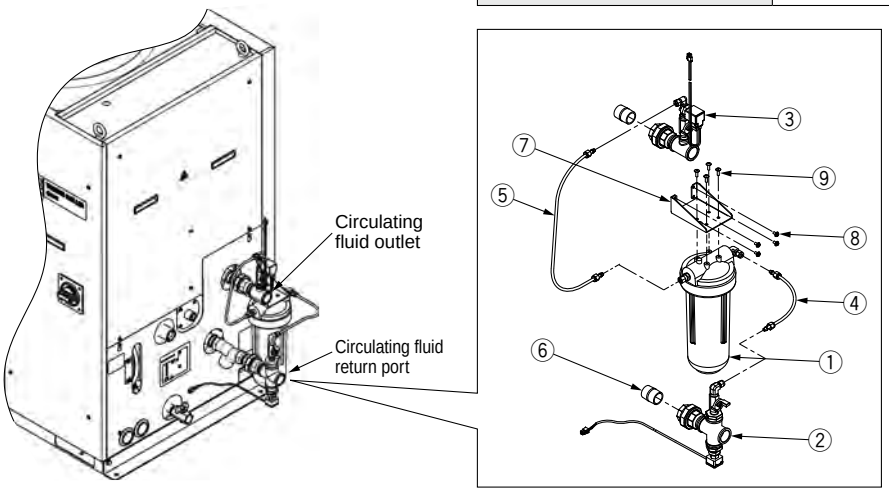

Parts List

No.	Description	Fluid contact material	Qty.
①	DI filter vessel	PC, PP	1
②	DI sensor assembly	Stainless steel, PPS	1
③	DI control piping assembly	Stainless steel, EPDM	1
④	DI filter outlet tube	PFA, POM	1
⑤	DI filter inlet tube	PFA, POM	1
⑥	Nipple (Size: 1 inch)	Stainless steel	2
⑦	Mounting bracket	—	1
⑧	Mounting screw (M5 screw)	—	4
⑨	Tapping screw (M5 screw)	—	4
⑩	DI filter cartridge (Part no.: HRS-DF001)*1	PP, PE	1

*1 The product should be replaced when it can no longer preserve the electrical conductivity set value.

④ Bypass Piping Set

When the circulating fluid goes below the minimum operating flow rate (as shown below), cooling capacity will be reduced and the temperature stability will be badly affected. Use the bypass piping set to ensure a circulating fluid flow rate of the minimum operating flow rate or more.

Part no.	Applicable model	Minimum operating flow rate [L/min]
HRS-BP005	**HRS200-A□-46-□S**	25

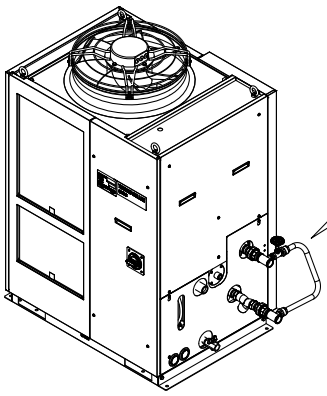

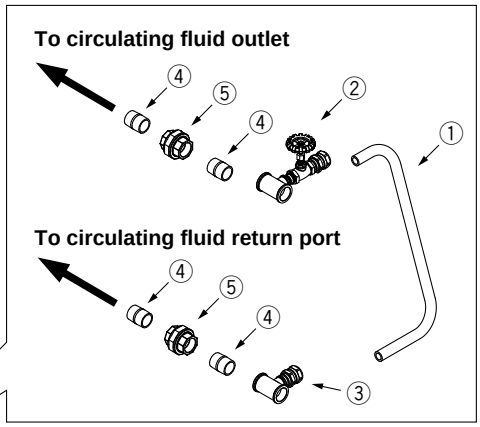

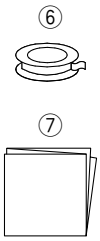

Parts List

No.	Description	Fluid contact material	Qty.
①	Hose (I.D.: 15 mm)	PVC	1 (Approx. 700 mm)
②	Outlet piping assembly (With globe valve)	Stainless steel, Brass, Bronze	1
③	Return piping assembly	Stainless steel, Brass	1
④	Nipple (Size: 1 inch)	Stainless steel	4
⑤	Union (Size: 1 inch)	Stainless steel	2
⑥	Sealant tape	PTFE	1
⑦	Operation Manual	—	1

⑤ Snow Protection Hood

Stainless steel snow protection hood for air-cooled chiller.
According to the mounting direction of the snow protection hood, the ventilation from the fan can be selected from four directions, front, rear, left and right.

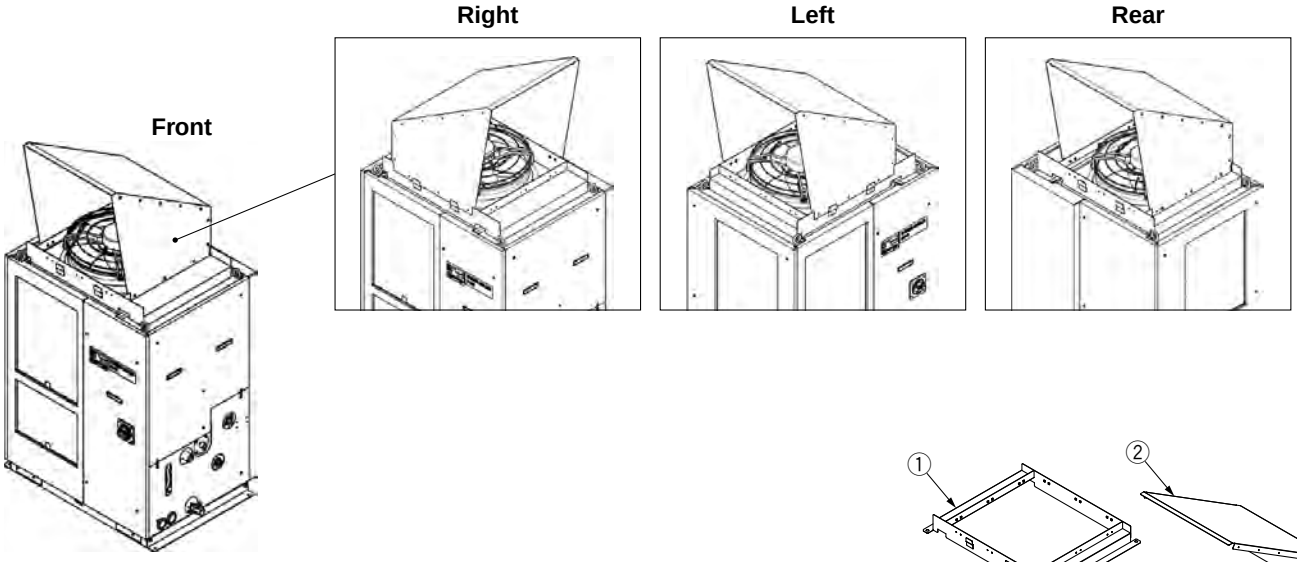

Part no.	Applicable model	Weight [kg]
HRS-BK004	**HRS200-A□-46-□S**	18

Parts List

No.	Description	Qty.
①	Snow protection hood base	1
②	Snow protection hood A	1
③	Snow protection hood B	2
④	Assembly/Mounting screw	20

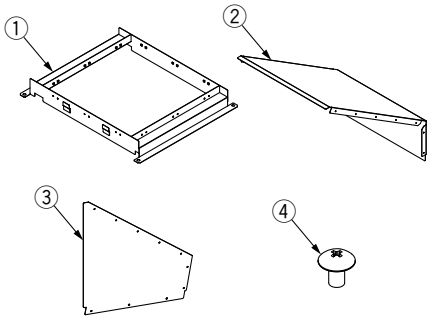

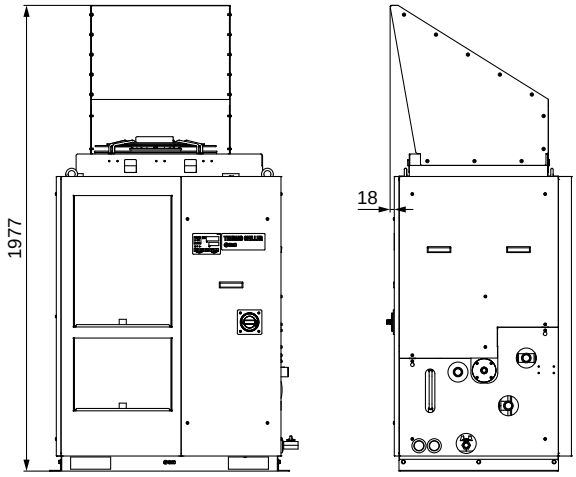

Mounting condition for HRS-BK004

∗ This hood does not completely prevent snow from entering the inside of the chiller.

⑥ Particle Filter Set

Removes foreign matter in the circulating fluid. This set cannot be directly connected to the thermo-chiller. Install it in the user's piping system. Refer to the Operation Manual for details.

Particle Filter Set

HRS−PF005−H

Accessory

Symbol	Accessory
Nil	None
H	With handle

Fluid	Tap water
Max. operating pressure	0.65 MPa
Operating temperature range	5 to 35°C
Nominal filtration accuracy	5 μm
Installation environment	Indoors

Parts List

No.	Description	Material	Qty.	Note
①	Body	PC, PP	1	—
②	Element*1	PP	1	—
③	Extension piece	Stainless steel	2	Conversion from NPT to Rc
④	Handle	—	1	When -H is selected
⑤	Sealant tape	PTFE	1	—

*1 The product should be replaced when the pressure drop reaches 0.1 MPa.

Replacement Element

HRS−PF006

The product should be replaced when the pressure drop reaches 0.1 MPa.

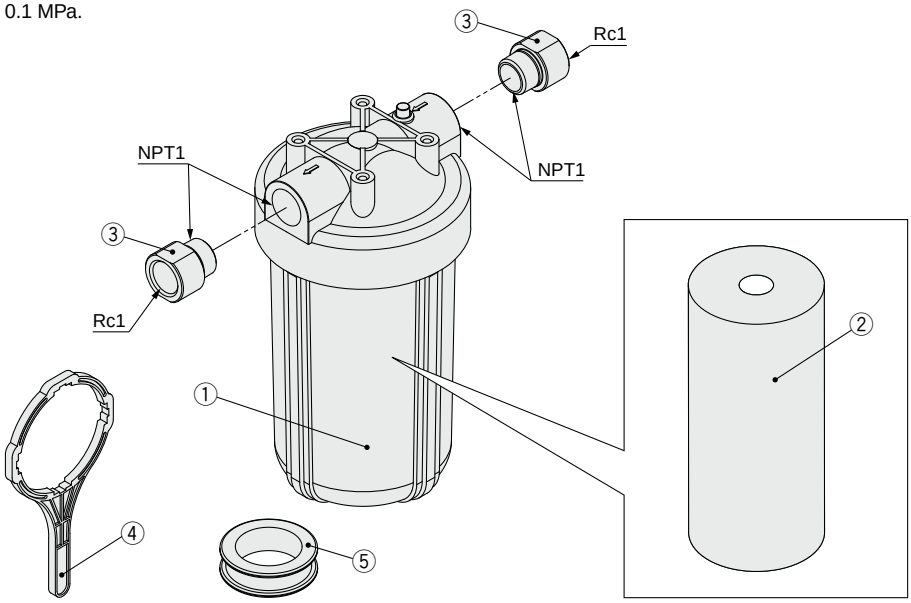

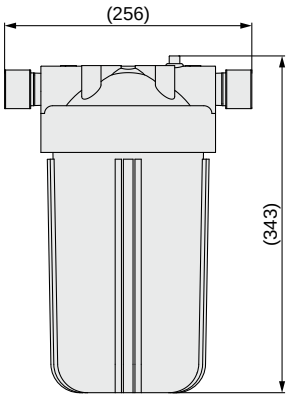

⑦Wired Remote Controller

When the wired remote controller is connected to the thermo-chiller, the operation start/stop setting or the set temperature can be changed from a place apart from the thermo-chiller. For details, refer to the Operation Manual.

Wired Remote Controller

HRS−CV004−1

Accessories

Symbol	Accessories
Nil	None
1	With cable (Approx. 20 m)
2	With cable (Approx. 50 m)
3	With cable (Approx. 100 m)

Wired remote controller

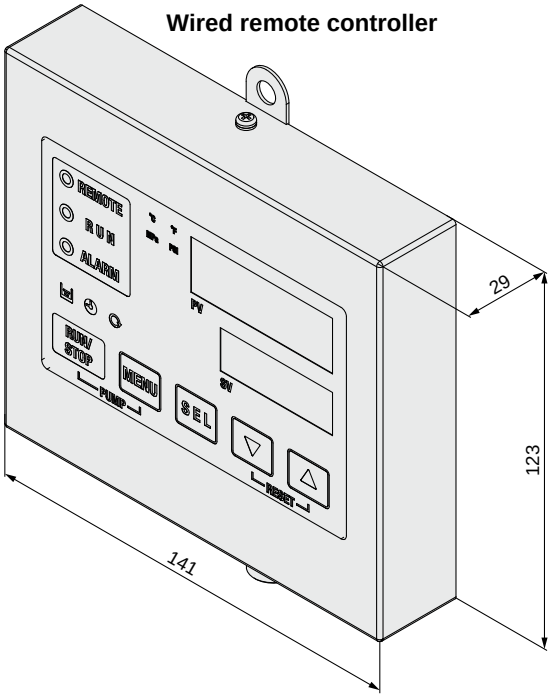

Displayed items

Circulating fluid discharge temperature
Circulating fluid discharge set temperature
Circulating fluid discharge pressure
Circulating fluid electric conductivity*1
Circulating fluid flow rate
Alarm code*2

*1 Only when the electric conductivity control set is used.
*2 Only when an alarm occurs. The alarm cannot be reset with the remote controller. Be sure to reset the alarm with the thermo-chiller main unit.

Operable items

Operation start/stop
Circulating fluid temperature setting
Alarm sound stop
Key-lock
Key operation sound ON/OFF
Digital display brightness adjustment
Alarm sound ON/OFF

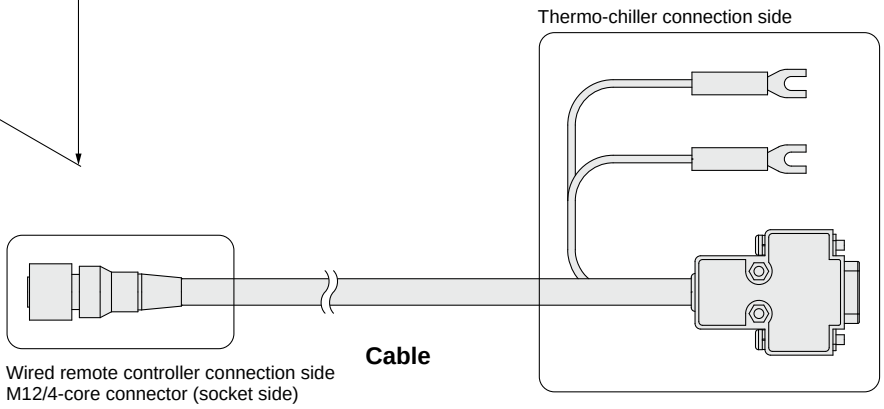

* To use the wired remote controller, the thermo-chiller main unit setting is needed.
* Use the wired remote controller indoors.
* Pass the cable through the duct, etc. so that it is not exposed to rain water or direct sunlight.

HRS200 Series
Cooling Capacity Calculation

Required Cooling Capacity Calculation

Example 1: When the heat generation amount in the user's equipment is known.

The heat generation amount can be determined based on the power consumption or output of the heat generating area — i.e. the area requiring cooling — within the user's equipment.∗1

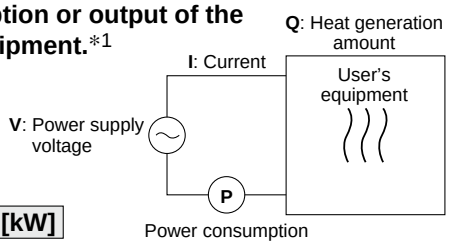

① **Derive the heat generation amount from the power consumption.**

Power consumption **P**: 20 [kW]

Q = P = 20 [kW]

Cooling capacity = Considering a safety factor of 20%, **20 [kW] x 1.2 = 24 [kW]**

② **Derive the heat generation amount from the power supply output.**

Power supply output **VI**: 20 [kVA]

Q = P = V x I x Power factor

In this example, using a power factor of 0.85:

= 20 [kVA] x 0.85 = 17 [kW]

Cooling capacity = Considering a safety factor of 20%,

17 [kW] x 1.2 = 20.4 [kW]

③ **Derive the heat generation amount from the output.**

Output (shaft power, etc.) **W**: 13 [kW]

$$Q = P = \frac{W}{\text{Efficiency}}$$

In this example, using an efficiency of 0.7:

$$= \frac{13}{0.7} = 18.6\ [\text{kW}]$$

Cooling capacity = Considering a safety factor of 20%,

18.6 [kW] x 1.2 = 22.3 [kW]

∗1 The examples above calculate the heat generation amount based on the power consumption.
The actual heat generation amount may differ due to the structure of the user's equipment.
Be sure to check it carefully.

Example 2: When the heat generation amount in the user's equipment is not known.

Obtain the temperature difference between inlet and outlet by circulating the circulating fluid inside the user's equipment.

Heat generation amount by user's equipment **Q**	: Unknown [W] ([J/s])
Circulating fluid	: Tap water∗1
Circulating fluid mass flow rate **qm**	: (= ρ x **qv** ÷ 60) [kg/s]
Circulating fluid density ρ	: 1 [kg/L]
Circulating fluid (volume) flow rate **qv**	: 70 [L/min]
Circulating fluid specific heat **C**	: 4.186 x 10^3 [J/(kg·K)]
Circulating fluid outlet temperature T_1	: 293 [K] (20 [°C])
Circulating fluid return temperature T_2	: 297 [K] (24 [°C])
Circulating fluid temperature difference ΔT	: 4 [K] (= $T_2 - T_1$)
Conversion factor: minutes to seconds (SI units)	: 60 [s/min]

∗1 Refer to the next page for the typical physical property value of tap water or other circulating fluids.

$$Q = qm \times C \times (T_2 - T_1)$$

$$= \frac{\rho \times qv \times C \times \Delta T}{60} = \frac{1 \times 70 \times 4.186 \times 10^3 \times 4.0}{60}$$

$$= 19535\ [\text{J/s}] \approx 19535\ [\text{W}] = 19.5\ [\text{kW}]$$

Cooling capacity = Considering a safety factor of 20%,

19.5 [kW] x 1.2 = 23.4 [kW]

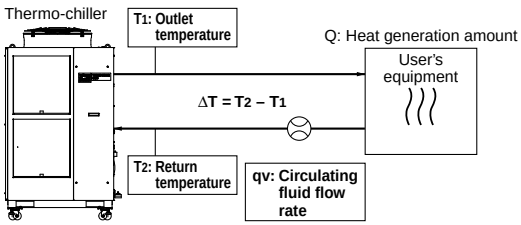

Example of conventional units (Reference)

Heat generation amount by user's equipment **Q**	: Unknown [cal/h] → [W]
Circulating fluid	: Tap water∗1
Circulating fluid weight flow rate **qm**	: (= ρ x **qv** x 60) [kgf/h]
Circulating fluid weight volume ratio γ	: 1 [kgf/L]
Circulating fluid (volume) flow rate **qv**	: 70 [L/min]
Circulating fluid specific heat **C**	: 1.0 x 10^3 [cal/(kgf·°C)]
Circulating fluid outlet temperature T_1	: 20 [°C]
Circulating fluid return temperature T_2	: 24 [°C]
Circulating fluid temperature difference ΔT	: 4 [°C] (= $T_2 - T_1$)
Conversion factor: hours to minutes	: 60 [min/h]
Conversion factor: kcal/h to kW	: 860 [(cal/h)/W]

$$Q = \frac{qm \times C \times (T_2 - T_1)}{860}$$

$$= \frac{\gamma \times qv \times 60 \times C \times \Delta T}{860}$$

$$= \frac{1 \times 70 \times 60 \times 1.0 \times 10^3 \times 4.0}{860}$$

$$= \frac{16800000\ [\text{cal/h}]}{860}$$

$$\approx 19534\ [\text{W}] = 19.5\ [\text{kW}]$$

Cooling capacity = Considering a safety factor of 20%,

19.5 [kW] x 1.2 = 23.4 [kW]

Required Cooling Capacity Calculation

Example 3: When there is no heat generation, and when cooling the object below a certain temperature and period of time.

Heat quantity by cooled substance (per unit time) **Q**	: Unknown [W] ([J/s])
Cooled substance	: Water
Cooled substance mass **m**	: (= ρ x **V**) [kg]
Cooled substance density ρ	: 1 [kg/L]
Cooled substance total volume **V**	: 300 [L]
Cooled substance specific heat **C**	: 4.186 x 10^3 [J/(kg·K)]
Cooled substance temperature when cooling begins T_0	: 305 [K] (32 [°C])
Cooled substance temperature after t hour T_t	: 293 [K] (20 [°C])
Cooling temperature difference ΔT	: 12 [K] (= $T_0 - T_t$)
Cooling time Δt	: 900 [s] (= 15 [min])

∗ Refer to the following for the typical physical property values by circulating fluid.

$$Q = \frac{m \times C \times (T_0 - T_t)}{\Delta t} = \frac{\rho \times V \times C \times \Delta T}{\Delta t}$$

$$= \frac{1 \times 300 \times 4.186 \times 10^3 \times 12}{900} = 16744\ [J/s] \approx 16.7\ [kW]$$

Cooling capacity = Considering a safety factor of 20%,

16.7 [kW] x 1.2 = 20 [kW]

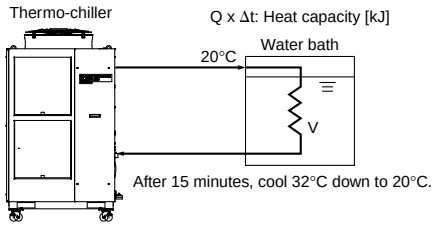

Example of conventional units (Reference)

Heat quantity by cooled substance (per unit time) **Q**	: Unknown [cal/h] → [W]
Cooled substance	: Water
Cooled substance weight **m**	: (= ρ x **V**) [kgf]
Cooled substance weight volume ratio γ	: 1 [kgf/L]
Cooled substance total volume **V**	: 300 [L]
Cooled substance specific heat **C**	: 1.0 x 10^3 [cal/(kgf·°C)]
Cooled substance temperature when cooling begins T_0	: 32 [°C]
Cooled substance temperature after t hour T_t	: 20 [°C]
Cooling temperature difference ΔT	: 12 [°C] (= $T_0 - T_t$)
Cooling time Δt	: 15 [min]
Conversion factor: hours to minutes	: 60 [min/h]
Conversion factor: kcal/h to kW	: 860 [(cal/h)/W]

$$Q = \frac{m \times C \times (T_0 - T_t)}{\Delta t \times 860} = \frac{\gamma \times V \times 60 \times C \times \Delta T}{\Delta t \times 860}$$

$$= \frac{1 \times 300 \times 60 \times 1.0 \times 10^3 \times 12}{15 \times 860}$$

$$\approx 16744\ [W] = 16.7\ [kW]$$

Cooling capacity = Considering a safety factor of 20%,

16.7 [kW] x 1.2 = 20 [kW]

∗ This is the calculated value by changing the fluid temperature only.
Thus, it varies substantially depending on the water bath or piping shape.

Precautions on Cooling Capacity Calculation

1. Heating capacity

When the circulating fluid temperature is set above room temperature, it needs to be heated by the thermo-chiller. The heating capacity depends on the circulating fluid temperature. Consider the radiation rate and heat capacity of the user's equipment and check beforehand if the required heating capacity is provided.

2. Pump capacity

<Circulating fluid flow rate>

Circulating fluid flow rate varies depending on the circulating fluid discharge pressure. Consider the installation height difference between the thermo-chiller and the user's equipment, and the piping resistance such as circulating fluid pipings, or piping size, or piping curves in the machine. Check beforehand if the required flow is achieved, using the pump capacity curves.

<Circulating fluid discharge pressure>

Circulating fluid discharge pressure has the possibility to increase up to the maximum pressure in the pump capacity curves.
Check beforehand if the circulating fluid pipings or circulating fluid circuit of the user's equipment are fully durable against this pressure.

Circulating Fluid Typical Physical Property Values

1. This catalog uses the following values for density and specific heat in calculating the required cooling capacity.

Density ρ: 1 [kg/L] (or, using conventional units, weight volume ratio γ = 1 [kgf/L])
Specific heat **C**: 4.19 x 10^3 [J/(kg·K)] (or, using conventional units, 1 x 10^3 [cal/(kgf·°C)])

2. Values for density and specific heat change slightly according to temperature shown below. Use this as a reference.

Water

Physical property value / Temperature	Density ρ [kg/L]	Specific heat C [J/(kg·K)]	Conventional units	
			Weight volume ratio γ [kgf/L]	Specific heat C [cal/(kgf·°C)]
5°C	1.00	4.2 x 10^3	1.00	1 x 10^3
10°C	1.00	4.19 x 10^3	1.00	1 x 10^3
15°C	1.00	4.19 x 10^3	1.00	1 x 10^3
20°C	1.00	4.18 x 10^3	1.00	1 x 10^3
25°C	1.00	4.18 x 10^3	1.00	1 x 10^3
30°C	1.00	4.18 x 10^3	1.00	1 x 10^3
35°C	0.99	4.18 x 10^3	0.99	1 x 10^3
40°C	0.99	4.18 x 10^3	0.99	1 x 10^3

15% Ethylene Glycol Aqueous Solution

Physical property value / Temperature	Density ρ [kg/L]	Specific heat C [J/(kg·K)]	Conventional units	
			Weight volume ratio γ [kgf/L]	Specific heat C [cal/(kgf·°C)]
5°C	1.02	3.91 x 10^3	1.02	0.93 x 10^3
10°C	1.02	3.91 x 10^3	1.02	0.93 x 10^3
15°C	1.02	3.91 x 10^3	1.02	0.93 x 10^3
20°C	1.01	3.91 x 10^3	1.01	0.93 x 10^3
25°C	1.01	3.91 x 10^3	1.01	0.93 x 10^3
30°C	1.01	3.91 x 10^3	1.01	0.94 x 10^3
35°C	1.01	3.91 x 10^3	1.01	0.94 x 10^3
40°C	1.01	3.92 x 10^3	1.01	0.94 x 10^3

∗ Shown above are reference values. Contact circulating fluid supplier for details.

HRS200 Series
Specific Product Precautions 1

Be sure to read this before handling the products. Refer to page 513 for safety instructions and pages 514 to 517 for temperature control equipment precautions.

Design

⚠ Warning

1. This catalog shows the specifications of a single unit.

1) Check the specifications of the single unit (contents of this catalog) and thoroughly consider the adaptability between the user's system and this unit.
2) Although a protection circuit as a single unit is installed, prepare a drain pan, water leakage sensor, discharge air facility, and emergency stop equipment, depending on the user's operating conditions. Also, the user is requested to carry out a safety design for the whole system.

2. When attempting to cool areas that are open to the atmosphere (tanks, pipes), plan your piping system accordingly.

When cooling open-air external tanks, arrange the piping so that there are coil pipes for cooling inside the tanks and to carry back the entire flow volume of circulating fluid that is released.

3. Use non-corrosive material for circulating fluid contact parts.

Using corrosive materials such as aluminum or iron for fluid contact parts such as piping may cause clogging or leakage in the circulating fluid circuit. Provide protection against corrosion when you use the product.

Selection

⚠ Warning

Model selection

When selecting a thermo-chiller model, the amount of heat generation from the user's equipment must be known. Obtain this value, referring to "Cooling Capacity Calculation" on pages 185 and 186 before selecting a model.

Handling

⚠ Warning

Thoroughly read the operation manual.

Read the operation manual completely before operation, and keep the manual where it can be referred to as necessary.

Operating Environment/Storage Environment

⚠ Warning

1. Do not use in the following environment as it will lead to a breakdown.

1) In locations where water vapor, salt water, and oil may splash on the product.
2) In locations where there are dust and particles.
3) In locations where corrosive gases, organic solvents, chemical fluids, or flammable gases are present. (This product is not explosion proof.)
4) In locations where the ambient temperature exceeds the limits as mentioned below.
   During transportation/storage: –15°C to 50°C (But as long as water or circulating fluid are not left inside the pipings)

Operating Environment/Storage Environment

⚠ Warning

During operation: –5°C to 45°C
∗ When the ambient temperature or circulating fluid temperature is 10°C or below, use the circulating fluid specified in "Operation at low ambient temperature or low circulating fluid temperature".
∗ Be sure to operate within the −5 to 40°C range to maintain UL standards-compliance.

5) In locations where condensation may occur.
6) In locations which receive direct sunlight or radiated heat.
7) In locations where there is a heat source nearby and the ventilation is poor.
8) In locations where temperature substantially changes.
9) In locations where strong magnetic noise occurs.
   (In locations where strong electric fields, strong magnetic fields and surge voltage occur.)
10) In locations where static electricity occurs, or conditions which make the product discharge static electricity.
11) In locations where high frequency occurs.
12) In locations where damage is likely to occur due to lightning.
13) In locations at an altitude of 3000 m or higher (Except during storage and transportation)
    ∗ For altitudes of 1000 m or higher
    Because of lower air density, the heat radiation efficiencies of the devices in the product will be lower in the location at an altitude of 1000 m or higher. Therefore, the maximum ambient temperature to use and the cooling capacity will lower according to the descriptions in the table below.
    Select the thermo-chiller considering the descriptions.
    ① Upper limit of ambient temperature: Use the product in ambient temperature of the described value or lower at each altitude.
    ② Cooling capacity coefficient: The product's cooling capacity will lower to one that multiplied by the described value at each altitude.

Altitude [m]	① Upper limit of ambient temperature [°C]	② Cooling capacity coefficient
Less than 1000 m	45	1.00
Less than 1500 m	42	0.85
Less than 2000 m	38	0.80
Less than 2500 m	35	0.75
Less than 3000 m	32	0.70

14) In locations where strong impacts or vibrations occur.
15) In locations where a massive force strong enough to deform the product is applied or a weight from a heavy object is applied.
16) In locations where there is not sufficient space for maintenance.
17) In locations where liquid that exceeds the conditions required for the degrees of protection IPX4 may splash on the product.
18) Insects or plants may enter the unit.

2. The product is not designed for clean room usage. It generates particles internally.

⚠ Caution

For the product operation in UL compliant conditions, use the product in the environment shown below:

- Environment at an altitude of 2000 meters or less
- Environment at an ambient temperature of 40°C or less
- Environment at a pollution degree of 2 or less
- Location where the ambient humidity is within the following range:
  During transportation or storage: 15% to 85% (No condensation)
  During operation: 30% to 70% (No condensation)

HRS200 Series
Specific Product Precautions 2

Be sure to read this before handling the products. Refer to page 513 for safety instructions and pages 514 to 517 for temperature control equipment precautions.

Operation at Low Ambient Temperature or Low Circulating Fluid Temperature

⚠ Caution

1. Circulating fluid

In order to avoid freezing of the circulating fluid, use aqueous solution of ethylene glycol.

Ambient temperature [°C]	Recommended circulating fluids
10 to 45	Tap water, ethylene glycol aqueous solution 15 (wt)%
−5 to 10	Ethylene glycol aqueous solution 15 (wt)%

Circulating fluid temperature[°C]	Recommended circulating fluids
10 to 35	Tap water, ethylene glycol aqueous solution 15 (wt)%
5 to 10	Ethylene glycol aqueous solution 15 (wt)%

2. And following instructions must be executed. If following instructions are not executed, not only Thermo-chiller alarm will be generated, but also damage of the product can result.

- Power has to be supplied to the Thermo-chiller all the time.
- Turn on anti-freezing function (set parameter: SE.10) all the time.
- When the power supply to the Thermo-chiller is stopped for a long period of time, discharge all the circulating fluid in the Thermo-chiller and user's device and piping. When the Thermo-chiller is refilled with the circulating fluid, supply the fluid at normal temperature.

Transportation/Carriage/Movement

⚠ Warning

1. This product will require an acceptance with the product not unloaded from the truck, and the user will need to unload the product by himself. Prepare a forklift.

The product will be delivered in the packaging shown below.

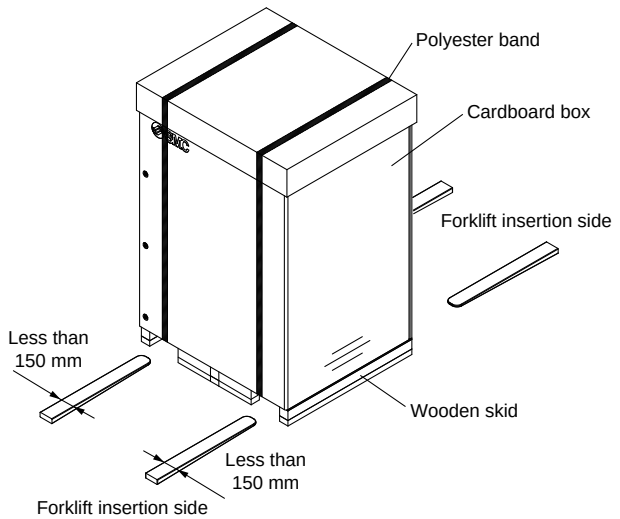

<When packaged>

Model	Weight [kg]	Dimensions [mm]
HRS200-A□-46-□S	256	Height 1585 x Width 1185 x Depth 955
HRS200-A□-46-AS	268	Height 1710 x Width 1185 x Depth 955

Transportation/Carriage/Movement

⚠ Warning

2. Transporting with forklift

1) A licensed driver should drive the forklift.
2) The proper place to insert the tines of the forklift differs depending on the model of cooler. Check the insert position, and be sure to drive the fork in far enough for it to come out the other side.
3) Be careful not to bump the fork to the cover panel or piping ports.

3. Hanging transportation

1) Crane manipulation and slinging work should be done by an eligible person.
2) Do not grip the piping on the right side or the handles of the panel.
3) When hanging by the eye bolts, be sure to use a 4-point hanging method. For the hanging angle, use caution regarding the position of the center of gravity and hold it within 60°.

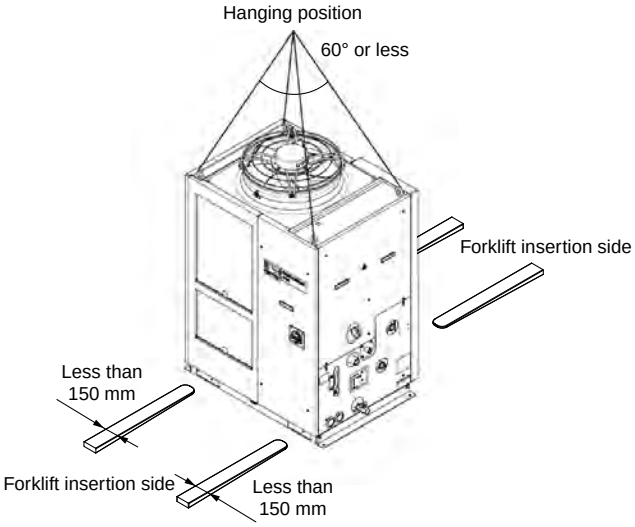

(When using option A/With caster adjuster-foot and optional accessories/Caster adjuster-foot kit KS002)

4. Transporting with casters

1) This product is heavy and should be moved by at least two people.
2) Do not grip the piping port on the right side or the handles of the panel.
3) When transporting using a forklift, be sure not to let it hit the casters or adjusters, and drive the fork all the way through until it comes out the other side.
4) Do not get across steps with casters.

⚠ Caution

If this product is to be transported after delivery, please use the original packaging the product was delivered in. If other packaging is to be used, carefully package the product so as to prevent the product from incurring any damage during transport.

HRS200 Series
Specific Product Precautions 3

Be sure to read this before handling the products. Refer to page 513 for safety instructions and pages 514 to 517 for temperature control equipment precautions.

Mounting/Installation

⚠ Warning

Do not place heavy objects on top of this product, or step on it.
The external panel can be deformed and danger can result.

⚠ Caution

1. Install on a rigid floor which can withstand this product's weight.

2. Secure with bolts, anchor bolts, etc.

3. Refer to the operation manual for this product, and secure an installation space that is necessary for the maintenance and ventilation.

1. The air-cooled type product exhausts heat using the fan that is mounted to the product. If the product is operated with insufficient ventilation, ambient temperature may exceed 45°C, and this will affect the performance and life of the product. To prevent this ensure that suitable ventilation is available (see below).
2. For installation indoors, ventilation ports and a ventilation fan should be equipped as needed.

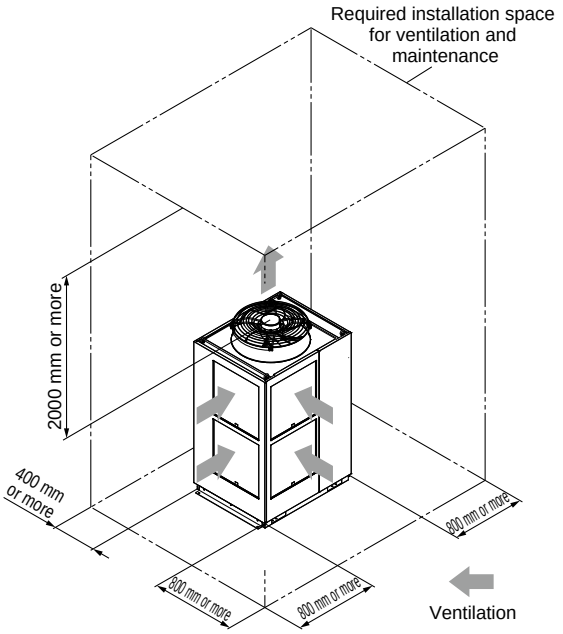

3. If it is impossible to exhaust heat from the installation area indoors, or when the installation area is conditioned, provide a duct for heat exhaustion to the air outlet port of this product for ventilation. Do not mount the inlet of the duct (flange) directly to the air vent of the product, and keep a space larger than the diameter of the duct. Additionally, consider the resistance of the duct when making the air vent port for the duct.

<Heat radiation amount/Required ventilation rate>

Heat radiation amount [kW]	Required ventilation rate [m³/min]	
	Differential temp. of 3°C between inside and outside of installation area	Differential temp. of 6°C between inside and outside of installation area
Approx. 37	615	310

4. When using the product at a low ambient temperature (10°C or less), refer to "Operation at low ambient temperature or low circulating fluid temperature" (page 188).

Piping

⚠ Caution

1. Regarding the circulating fluid piping, consider carefully the suitability for temperature and circulating fluid.
If the operating performance is not sufficient, the pipings may burst during operation. Also, the use of corrosive materials such as aluminum or iron for fluid contact parts, such as piping, may not only lead to clogging or leakage in the circulating fluid circuit but also refrigerant leakage and other unexpected problems. Provide protection against corrosion when you use the product.

2. Select the piping port size which can exceed the rated flow.
For the rated flow, refer to the pump capacity table.

3. When tightening at the drain port of this product, use a pipe wrench to clamp the connection ports.

4. Supply water pressure to the automatic fluid fill port of this product should be 0.2 to 0.5 MPa.
This product has a built-in ball (float) tap. If you attach it to the faucet of a sink, etc. it will automatically supply water to the rated fluid level of the tank (halfway between HIGH and LOW.)
If the water supply pressure is too high, the pipes may burst during use. Proceed with caution.

5. Ensure that piping is connected to the overflow port so that the circulating fluid can be exhausted to the drainage pit when the fluid level in the tank increases.

6. For the circulating fluid piping connection, install a drain pan and wastewater collection pit just in case the circulating fluid may leak.

7. This product series are constant-temperature fluid circulating machines with built-in tanks.
Do not install equipment on your system side such as pumps that forcibly return the circulating fluid to the unit. Also, if you attach an external tank that is open to the air, it may become impossible to circulate the circulating fluid. Proceed with caution.

HRS200 Series
Specific Product Precautions 4

Be sure to read this before handling the products. Refer to page 513 for safety instructions and pages 514 to 517 for temperature control equipment precautions.

Electrical Wiring

⚠ Warning

Grounding should never be connected to a water line, gas line or lightning rod.

⚠ Caution

1. Power supply and communication cables should be prepared by user.

2. Provide a stable power supply which is not affected by surge or distortion.

If the voltage increase ratio (dV/dt) at the zero cross should exceed 40 V/200 μsec., it may result in malfunction.

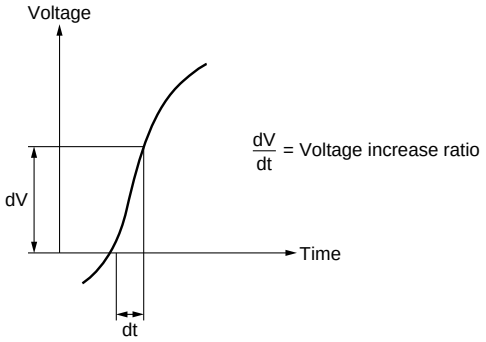

3. This product is installed with a breaker with the following operating characteristics.

For the user's equipment (inlet side), use a breaker whose operating time is equal to or longer than the breaker of this product. If a breaker with shorter operating time is connected, the user's equipment could be cut off due to the inrush current of the motor of this product.

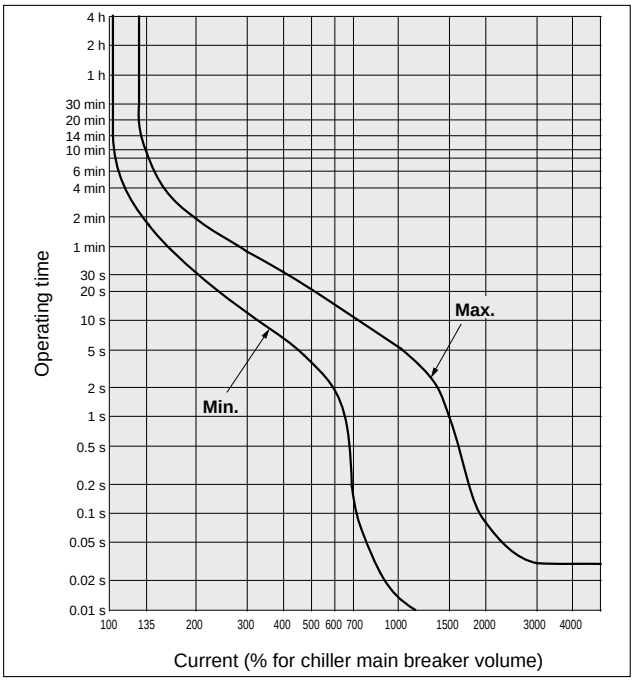

Electrical Wiring

⚠ Caution

4. For the product operation in the UL compliant conditions, the conditions shown below must be satisfied:

- Use power supply of overvoltage category 2*
- For power supply cable, it is to be properly prepared by the customer in accordance with National Electrical Code and Canadian Electrical Code.
- Bending radius of the power supply cable must be 38.1 mm or more.

* When using a power supply in the overvoltage category 3, take measures such as mounting an isolation transformer between the product and the power supply or keep the transient overvoltage of the power supply to 2200 V or less by using a varistor, etc.

Circulating Fluid

⚠ Caution

1. Avoid oil or other foreign matter entering the circulating fluid.

2. When water is used as a circulating fluid, use tap water that conforms to the appropriate water quality standards.

Use tap water that conforms to the standards shown below (including water used for dilution of ethylene glycol aqueous solution).

Tap Water (as a Circulating Fluid) Quality Standards

The Japan Refrigeration and Air Conditioning Industry Association
JRA GL-02-1994 "Cooling water system – Circulation type – Make-up water"

	Item	Unit	Standard value	Influence	
				Corrosion	Scale generation
Standard item	pH (at 25°C)	—	6.0 to 8.0	○	○
	Electric conductivity (25°C)	[μS/cm]	100*1 to 300*1	○	○
	Chloride ion (Cl^-)	[mg/L]	50 or less	○	
	Sulfuric acid ion (SO_4^{2-})	[mg/L]	50 or less	○	
	Acid consumption amount (at pH4.8)	[mg/L]	50 or less		○
	Total hardness	[mg/L]	70 or less		○
	Calcium hardness ($CaCO_3$)	[mg/L]	50 or less		○
	Ionic state silica (SiO_2)	[mg/L]	30 or less		○
Reference item	Iron (Fe)	[mg/L]	0.3 or less	○	○
	Copper (Cu)	[mg/L]	0.1 or less	○	
	Sulfide ion (S_2^-)	[mg/L]	Should not be detected.	○	
	Ammonium ion (NH_4^+)	[mg/L]	0.1 or less	○	
	Residual chlorine (Cl)	[mg/L]	0.3 or less	○	
	Free carbon (CO_2)	[mg/L]	4.0 or less	○	

*1 In the case of [MΩ·cm], it will be 0.003 to 0.01.
- ○: Factors that have an effect on corrosion or scale generation.
- Even if the water quality standards are met, complete prevention of corrosion is not guaranteed.

3. Use an ethylene glycol aqueous solution that does not contain additives such as preservatives.

4. Refer to "Operation at low ambient temperature or low circulating fluid temperature" (page 188) for the concentration of the ethylene glycol aqueous solution.

5. When deionized water is used, the electric conductivity should be 1 μS/cm or higher (Electric resistivity: 1 MΩ·cm or lower).

HRS200 Series
Specific Product Precautions 5

Be sure to read this before handling the products. Refer to page 513 for safety instructions and pages 514 to 517 for temperature control equipment precautions.

Operation

⚠ Warning

1. Confirmation before operation

1) The fluid level of a tank should be within the specified range of "HIGH" and "LOW." When exceeding the specified level, the circulating fluid will overflow.

2) Remove the air.
Conduct a trial operation, looking at the fluid level.
Since the fluid level will go down when the air is removed from the user's piping system, supply water once again when the fluid level is reduced. When there is no reduction in the fluid level, the job of removing the air is completed.
Pump can be operated independently.

2. Confirmation during operation

- Check the circulating fluid temperature.
The operating temperature range of the circulating fluid is between 5 and 35°C.
When the amount of heat generated from the user's equipment is greater than the product's capability, the circulating fluid temperature may exceed this range. Use caution regarding this matter.

3. Emergency stop method

- When an abnormality is confirmed, stop the machine immediately. After the machine has stopped, make sure to turn off the breaker of the user's equipment (on the upstream side).

Operation Restart Time/Operation and Suspension Frequency

⚠ Caution

1. Wait five minutes or more before restarting operation after it has been stopped. If the operation is restarted within five minutes, the protection circuit may activate and the operation may not start properly.

2. Operation and suspension frequency should not exceed 10 times per day. Frequently switching between operation and suspension may result in the malfunction of the refrigeration circuit.

Protection Circuit

⚠ Caution

If operating in the below conditions, the protection circuit will activate and an operation may not be performed or will stop.

- Power supply voltage is not within the rated voltage range of ±10%.
- In case the water level inside the tank is reduced abnormally.
- Circulating fluid temperature is too high.
- Compared to the cooling capacity, the heat generation amount of the user's equipment is too high.
- Ambient temperature is over 45°C.
- Ventilation hole is clogged with dust or dirt

Maintenance

⚠ Caution

<Periodical inspection every one month>

Clean the ventilation hole.

If the dustproof filter of water-cooled type product becomes clogged with dust or debris, a decline in cooling performance can result.
In order to avoid deforming or damaging the dustproof filter, clean it with a long-haired brush or air gun.

Maintenance

⚠ Caution

<Periodical inspection every three months>

Inspect the circulating fluid.

1. When using tap water or deionized water
   - Replacement of circulating fluid
   Failure to replace the circulating fluid can lead to the development of bacteria or algae. Replace it regularly depending on your usage conditions.
2. When using ethylene glycol aqueous solution
   Use a concentration meter to confirm that the concentration does not exceed 15%.
   Dilute or add as needed to adjust the concentration.

<Periodical inspection during the winter season>

1. Make water-removal arrangements beforehand.

If there is a risk of the circulating fluid freezing when the product is stopped, release the circulating fluid in advance.

2. Consult a professional.

This product has an "anti-freezing function", "warming-up function", and "anti-snow coverage function." Read the operation manual carefully, and if any additional anti-freezing function (e.g. tape heater) is needed, ask for it from the vendor.

■ Refrigerant with GWP reference

Refrigerant	Global warming potential (GWP)	
	Regulation (EU) No 517/2014 (Based on the IPCC AR4)	Revised Fluorocarbons Recovery and Destruction Law (Japanese law)
R134a	1,430	1,430
R404A	3,922	3,920
R407C	1,774	1,770
R410A	2,088	2,090

∗ This product is hermetically sealed and contains fluorinated greenhouse gases (HFC). When this product is sold on the market in the EU after January 1, 2017, it needs to be compliant with the quota system of the F-Gas Regulation in the EU.
∗ See specification table for refrigerant used in the product.